Cambridge Assessment International Education

Cambridge International AS & A Level

CANDIDATE NAME

CENTRE NUMBER

CANDIDATE NUMBER

9790709313

PHYSICS **9702/23**

Paper 2 AS Level Structured Questions **October/November 2021**

1 hour 15 minutes

You must answer on the question paper.

No additional materials are needed.

INSTRUCTIONS

- Answer **all** questions.
- Use a black or dark blue pen. You may use an HB pencil for any diagrams or graphs.
- Write your name, centre number and candidate number in the boxes at the top of the page.
- Write your answer to each question in the space provided.
- Do **not** use an erasable pen or correction fluid.
- Do **not** write on any bar codes.
- You may use a calculator.
- You should show all your working and use appropriate units.

INFORMATION

- The total mark for this paper is 60.
- The number of marks for each question or part question is shown in brackets [ ].

This document has **16** pages. Any blank pages are indicated.

DC (DH/SG) 199362/2
© UCLES 2021

[Turn over

Data

speed of light in free space	$c = 3.00 \times 10^{8}\,\text{m s}^{-1}$
permeability of free space	$\mu_0 = 4\pi \times 10^{-7}\,\text{H m}^{-1}$
permittivity of free space	$\varepsilon_0 = 8.85 \times 10^{-12}\,\text{F m}^{-1}$
	$(\frac{1}{4\pi\varepsilon_0} = 8.99 \times 10^{9}\,\text{m F}^{-1})$
elementary charge	$e = 1.60 \times 10^{-19}\,\text{C}$
the Planck constant	$h = 6.63 \times 10^{-34}\,\text{J s}$
unified atomic mass unit	$1\,\text{u} = 1.66 \times 10^{-27}\,\text{kg}$
rest mass of electron	$m_e = 9.11 \times 10^{-31}\,\text{kg}$
rest mass of proton	$m_p = 1.67 \times 10^{-27}\,\text{kg}$
molar gas constant	$R = 8.31\,\text{J K}^{-1}\,\text{mol}^{-1}$
the Avogadro constant	$N_A = 6.02 \times 10^{23}\,\text{mol}^{-1}$
the Boltzmann constant	$k = 1.38 \times 10^{-23}\,\text{J K}^{-1}$
gravitational constant	$G = 6.67 \times 10^{-11}\,\text{N m}^2\,\text{kg}^{-2}$
acceleration of free fall	$g = 9.81\,\text{m s}^{-2}$

© UCLES 2021

Formulae

uniformly accelerated motion	$s = ut + \frac{1}{2}at^2$ $v^2 = u^2 + 2as$
work done on/by a gas	$W = p\Delta V$
gravitational potential	$\phi = -\frac{Gm}{r}$
hydrostatic pressure	$p = \rho gh$
pressure of an ideal gas	$p = \frac{1}{3}\frac{Nm}{V}\langle c^2 \rangle$
simple harmonic motion	$a = -\omega^2 x$
velocity of particle in s.h.m.	$v = v_0 \cos \omega t$ $v = \pm \omega \sqrt{(x_0^2 - x^2)}$
Doppler effect	$f_o = \frac{f_s v}{v \pm v_s}$
electric potential	$V = \frac{Q}{4\pi\varepsilon_0 r}$
capacitors in series	$1/C = 1/C_1 + 1/C_2 + \ldots$
capacitors in parallel	$C = C_1 + C_2 + \ldots$
energy of charged capacitor	$W = \frac{1}{2}QV$
electric current	$I = Anvq$
resistors in series	$R = R_1 + R_2 + \ldots$
resistors in parallel	$1/R = 1/R_1 + 1/R_2 + \ldots$
Hall voltage	$V_H = \frac{BI}{ntq}$
alternating current/voltage	$x = x_0 \sin \omega t$
radioactive decay	$x = x_0 \exp(-\lambda t)$
decay constant	$\lambda = \frac{0.693}{t_{\frac{1}{2}}}$

© UCLES 2021

Answer **all** the questions in the spaces provided.

1 **(a)** A solid cylinder of weight 24 N is made of material of density 850 kg m^{-3}. The cylinder has a length of 0.18 m, as shown in Fig. 1.1.

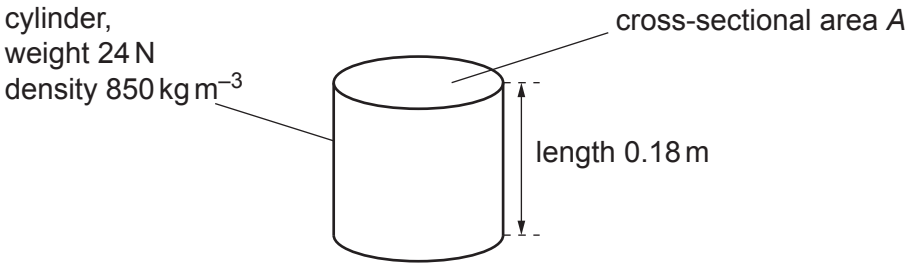

Fig. 1.1

Show that the cross-sectional area A of the cylinder is 0.016 m^2.

[3]

(b) The cylinder in **(a)** is attached by a spring to the bottom of a rigid container of liquid, as shown in Fig. 1.2.

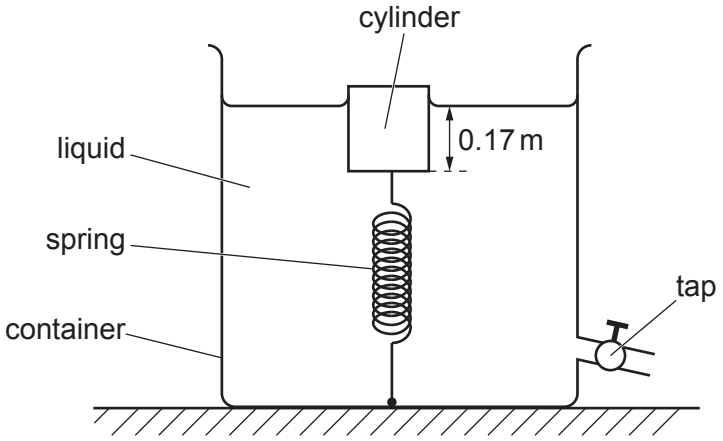

Fig. 1.2 (not to scale)

The cylinder is in equilibrium with its bottom face at a depth of 0.17 m below the surface of the liquid. The tension in the spring is 8.0 N.

(i) Show that the upthrust acting on the cylinder due to the liquid is 32 N.

[1]

(ii) Calculate the density of the liquid.

density = ... $kg\,m^{-3}$ [3]

(c) Fig. 1.3 shows the variation of the tension F with the length of the spring in **(b)**.

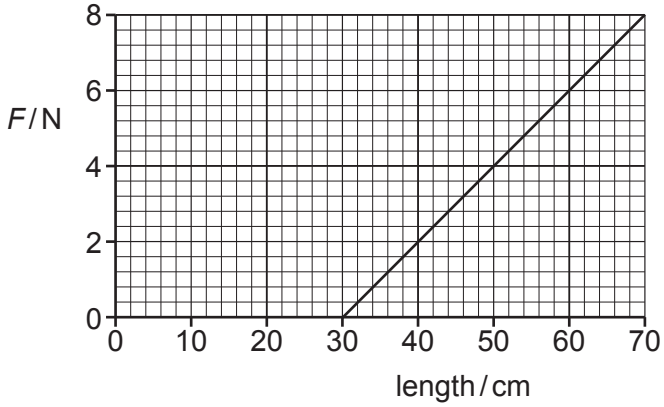

Fig. 1.3

(i) The tap at the bottom of the container is opened so that a fixed amount of liquid flows out of the container. The cylinder moves downwards so that the tension in the spring changes from 8.0 N to 4.0 N.

Determine the change in the elastic potential energy of the spring.

change in elastic potential energy = ... J [3]

(ii) More liquid is let out of the container until the upthrust on the cylinder becomes 24 N.

For the upthrust of 24 N, determine the length of the spring.

length = ... cm [1]

[Total: 11]

2 **(a)** State what is meant by *work done*.

.....

..... [1]

(b) Use your answer in **(a)** to show that the SI base units of energy are $\text{kg m}^2\text{ s}^{-2}$.

[1]

(c) A metal rod is heated at one end so that thermal energy flows to the other end.
The thermal energy E that flows through the rod in time t is given by

$$E = \frac{cA(T_1 - T_2)t}{L}$$

where A is the cross-sectional area of the rod,
T_1 and T_2 are the temperatures of the ends of the rod,
L is the length of the rod,
and c is a constant.

Determine the SI base units of c.

SI base units ..... [3]

[Total: 5]

3 **(a)** Define *velocity*.

.....

..... [1]

(b) A remote-controlled toy aircraft is flying horizontally in a wind. Fig. 3.1 shows the velocity vectors, to scale, of the wind and of the aircraft in still air.

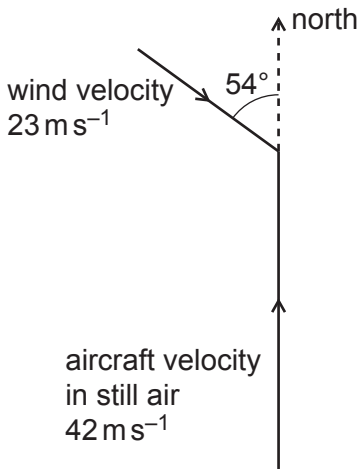

Fig. 3.1

The velocity of the aircraft in still air is 42 m s^{-1} to the north. The velocity of the wind is 23 m s^{-1} in a direction of 54° east of south.

Determine the magnitude of the resultant velocity of the aircraft.

magnitude of velocity = ... m s^{-1} [2]

(c) The engine of the aircraft in **(b)** stops. The aircraft then glides towards the ground with a constant velocity at an angle θ to the horizontal, as illustrated in Fig. 3.2.

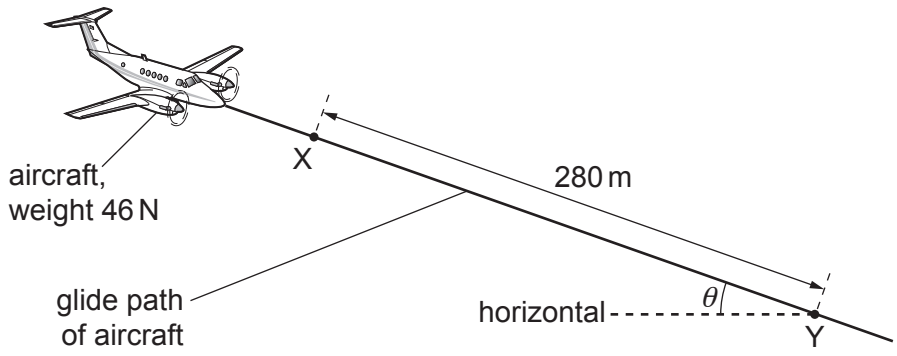

Fig. 3.2 (not to scale)

The aircraft has a weight of 46 N and travels a distance of 280 m from point X to point Y. The change in gravitational potential energy of the aircraft for its movement from X to Y is 6100 J.

Assume that there is now no wind.

(i) Calculate angle θ.

θ = ... ° [3]

(ii) Calculate the magnitude of the force acting on the aircraft due to air resistance.

force = ... N [2]

© UCLES 2021

(d) The aircraft in **(c)** travels from X to Y in a time of 14 s. Fig. 3.3 shows that, as the aircraft travels from X to Y, it moves directly towards an observer who is standing on the ground.

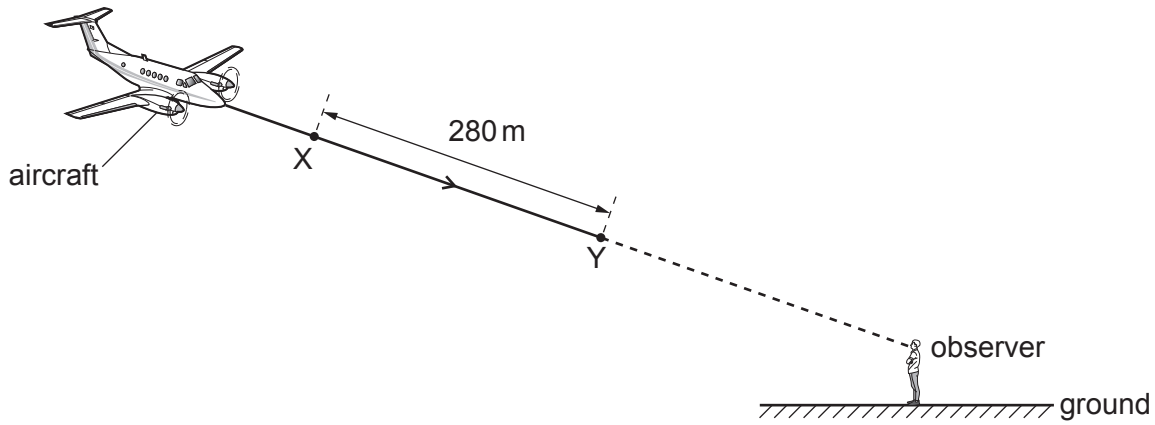

Fig. 3.3 (not to scale)

The aircraft emits sound as it travels from X to Y. The observer hears sound of frequency 450 Hz. The speed of the sound in the air is 340 m s^{-1}.

Calculate the frequency of the sound that is emitted by the aircraft.

frequency = ... Hz [3]

[Total: 11]

4 An α-particle moves in a straight line through a vacuum with a constant speed of $4.1 \times 10^6\,\text{m s}^{-1}$. The α-particle enters a uniform electric field at point A, as shown in Fig. 4.1.

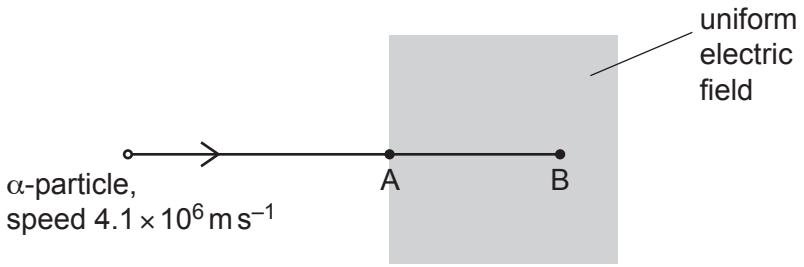

Fig. 4.1

The α-particle continues to move in the same straight line until it is brought to rest at point B by the electric field. The deceleration of the α-particle by the electric field is $2.7 \times 10^{14}\,\text{m s}^{-2}$.

(a) State the direction of the electric field.

..... [1]

(b) Calculate the distance AB.

distance = ... m [2]

(c) Calculate the electric field strength.

electric field strength = ... V m^{-1} [3]

© UCLES 2021

(d) The α-particle is at point A at time $t = 0$.

On Fig. 4.2, sketch the variation with time t of the momentum of the α-particle as it travels from point A to point B. Numerical values are not required.

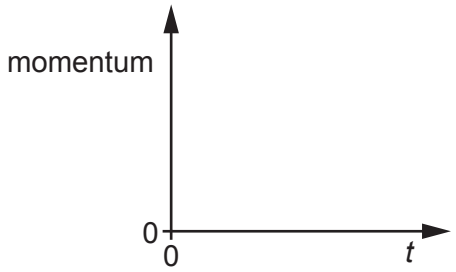

Fig. 4.2

[1]

(e) State the name of the quantity that is represented by the gradient of the graph in **(d)**.

..... [1]

(f) A β^- particle now enters the electric field along the same initial path as the α-particle and with the same initial speed of $4.1 \times 10^6\,m\,s^{-1}$.

(i) Calculate the kinetic energy, in J, of the β^- particle at point A.

kinetic energy = ... J [3]

(ii) State and explain the differences between the electric force on the β^- particle in the electric field and the electric force on the α-particle in the electric field.

.....

.....

.....

.....

..... [3]

(iii) The β^- particle is produced by the decay of a nucleus. State the name of another lepton that is produced at the same time as the β^- particle.

..... [1]

[Total: 15]

5 **(a)** For a progressive wave on a stretched string, state what is meant by *amplitude*.

.....

..... [1]

(b) Light from a laser has a wavelength of 690 nm in a vacuum.

Calculate the period of the light wave.

period = ... s [3]

(c) A two-source interference experiment uses the arrangement shown in Fig. 5.1.

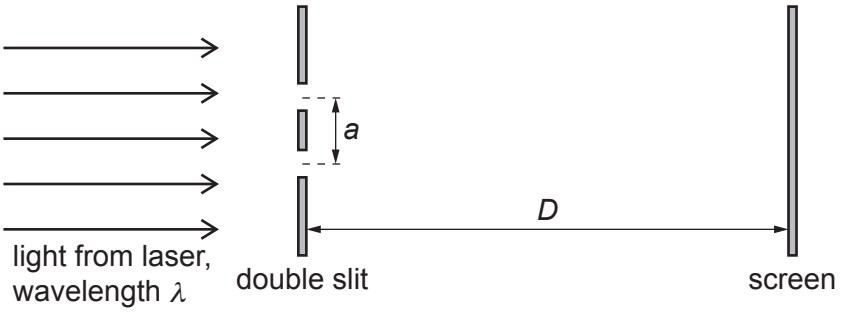

Fig. 5.1 (not to scale)

Light from a laser is incident normally on a double slit. A screen is parallel to the double slit.

Interference fringes are seen on the screen at distance *D* from the double slit. The separation of the centres of the slits is *a*. The light has wavelength λ.

The separation *x* of the centres of adjacent bright fringes is measured for different values of distance *D*.

© UCLES 2021

The variation with D of x is shown in Fig. 5.2.

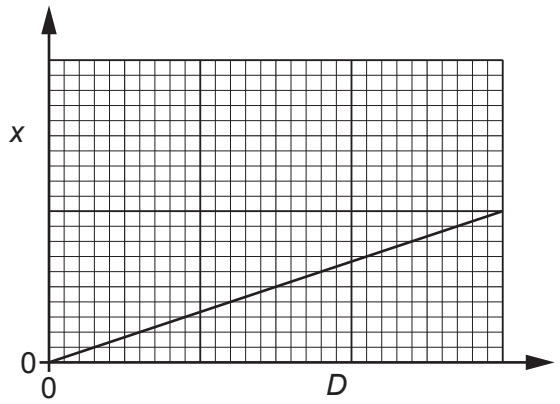

Fig. 5.2

The gradient of the graph is G.

(i) Determine an expression, in terms of G and λ, for the separation a of the slits.

$a =$ ..... [2]

(ii) The experiment is repeated with slits of separation $2a$. The wavelength of the light is unchanged.

On Fig. 5.2, sketch a graph to show the results of this experiment. [2]

[Total: 8]

6 **(a)** A resistance wire of uniform cross-sectional area $3.3 \times 10^{-7}\,m^2$ and length 2.0 m is made of metal of resistivity $5.0 \times 10^{-7}\,\Omega\,m$.

Show that the resistance of the wire is 3.0 Ω.

[2]

(b) The ends of the resistance wire in **(a)** are connected to the terminals X and Y in the circuit shown in Fig. 6.1.

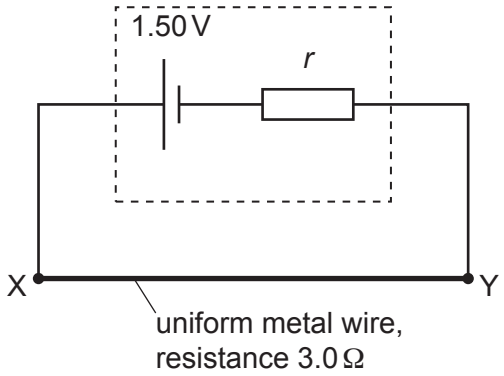

Fig. 6.1

The cell has an electromotive force (e.m.f.) of 1.50 V and internal resistance *r*. The potential difference between X and Y is 1.20 V.

Calculate:

(i) the current in the circuit

current = ... A [1]

(ii) the internal resistance *r*.

r = ... Ω [2]

© UCLES 2021

(c) A galvanometer and a cell of e.m.f. *E* with negligible internal resistance are connected to the circuit in **(b)**, as shown in Fig. 6.2.

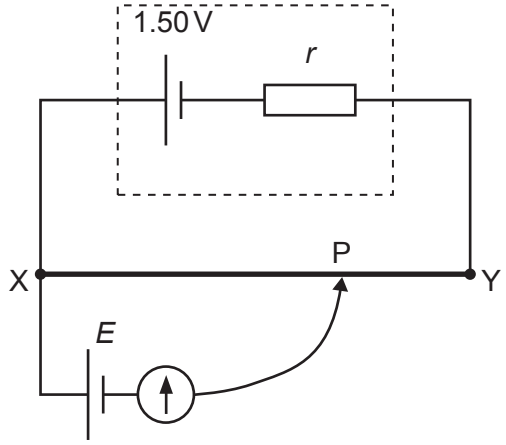

Fig. 6.2

The resistance wire between X and Y has a length of 2.0 m. The galvanometer has a reading of zero when the connection P is adjusted so that the length XP is 1.4 m.

Determine the e.m.f. *E* of the cell.

E = ... V [2]

(d) The circuit in Fig. 6.2 is modified by replacing the original resistance wire with a second resistance wire. The second wire has the same length as the original wire and is made of the same metal.

The second wire has a smaller cross-sectional area than the original wire.

Connection P is adjusted on the second wire so that the galvanometer has a reading of zero.

State and explain whether length XP for the second wire is shorter than, longer than or the same as length XP for the original wire when the galvanometer reading is zero.

.....

.....

.....

.....

..... [3]

[Total:10]

© UCLES 2021

BLANK PAGE

Permission to reproduce items where third-party owned material protected by copyright is included has been sought and cleared where possible. Every reasonable effort has been made by the publisher (UCLES) to trace copyright holders, but if any items requiring clearance have unwittingly been included, the publisher will be pleased to make amends at the earliest possible opportunity.

To avoid the issue of disclosure of answer-related information to candidates, all copyright acknowledgements are reproduced online in the Cambridge Assessment International Education Copyright Acknowledgements Booklet. This is produced for each series of examinations and is freely available to download at www.cambridgeinternational.org after the live examination series.

Cambridge Assessment International Education is part of the Cambridge Assessment Group. Cambridge Assessment is the brand name of the University of Cambridge Local Examinations Syndicate (UCLES), which itself is a department of the University of Cambridge.

© UCLES 2021